CITY OF HICKORY
PATRICK BEAVER - STAGE

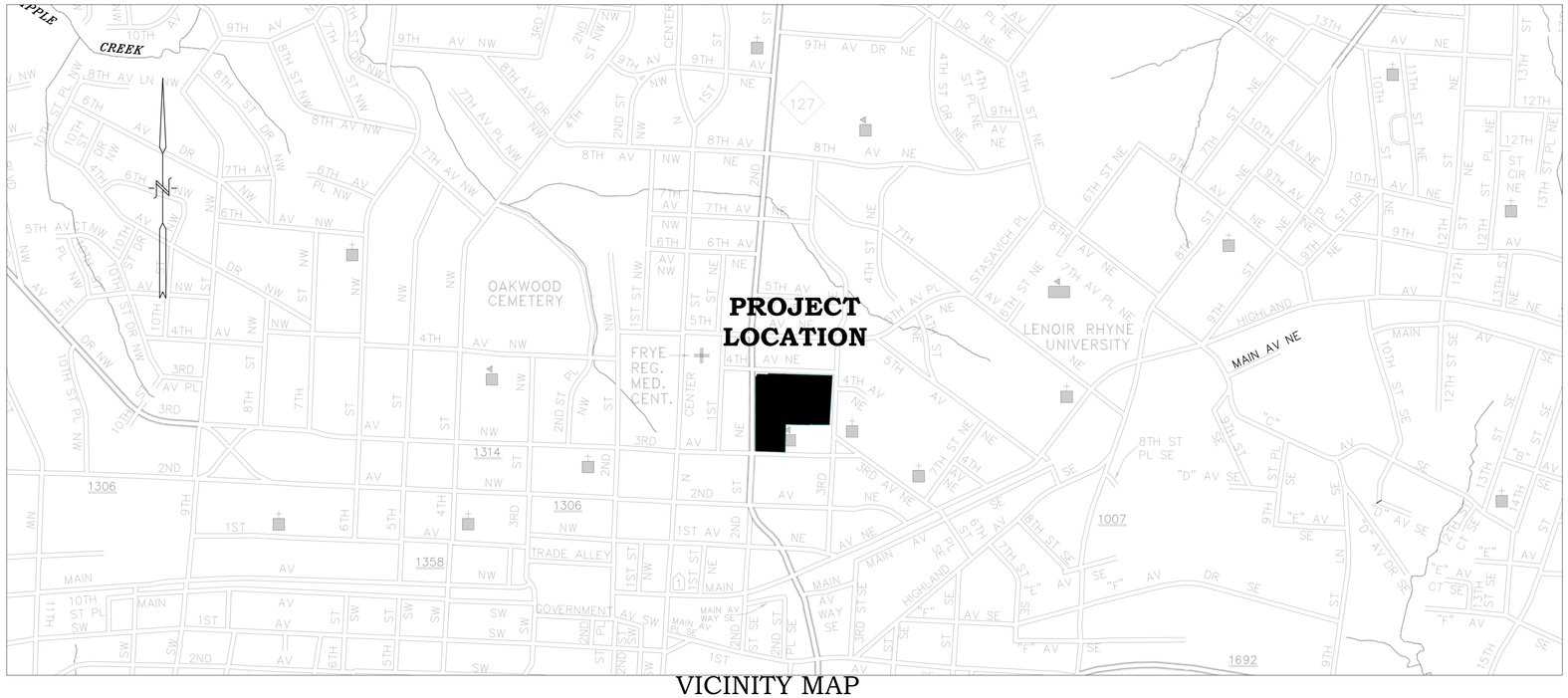

VICINITY MAP
Not To Scale

GENERAL NOTES:

1) CONTRACTOR SHALL VISIT THE SITE AND BECOME FAMILIAR WITH ALL SITE CONDITIONS. CONTRACTOR SHALL REQUEST CLARIFICATION FROM ENGINEER IN THE EVENT OF A CONFLICT BETWEEN THE PLANS, SPECIFICATIONS AND SITE CONDITIONS.

2) CONTRACTOR SHALL OBTAIN AND PAY FOR ALL PERMITS REQUIRED TO COMPLETE THE WORK DESCRIBED HEREIN.

3) ALL WORK SHALL BE IN ACCORDANCE WITH THE PLANS, STATE & LOCAL CODES, ENGINEERING MANUAL OF PRACTICE, AND ALL OTHER CITY, STATE, AND FEDERAL REGULATIONS AND/OR STANDARDS. IN THE EVENT OF A CONFLICT, THE MORE STRINGENT SHALL APPLY.

4) CONTRACTOR SHALL SUBMIT TO OWNER ALL SUB-CONTRACTORS USED FOR THIS PROJECT FOR APPROVAL BEFORE WORK BEGINS.

5) CONTRACTOR IS RESPONSIBLE FOR CALLING 811 FOR UNDERGROUND LOCATIONS AND CALLING CITY OF HICKORY UTILITY DEPARTMENT FOR WATER AND SEWER LOCATIONS. CONTRACTOR IS RESPONSIBLE FOR PAYING FOR ANY REPAIRS TO UNDERGROUND UTILITIES DAMAGED DURING CONSTRUCTION.

6) UNDER NO CIRCUMSTANCES SHALL THE CONTRACTOR WORK OUTSIDE THE PROPERTY LINES SHOWN ON THE PLANS. IN THE EVENT THAT PROPERTY ADJACENT TO THE PROJECT IS DISTURBED IN ANY WAY, THE CONTRACTOR IS RESPONSIBLE FOR ALL REPAIRS/REPLACEMENTS AT CONTRACTOR'S EXPENSE.

7) ALL BACKFILL AND FILL MATERIAL MUST BE NON-PLASTIC IN NATURE, FREE FROM ROOTS, VEGETATIVE MATTER, WASTE, CONSTRUCTION MATERIAL OR OTHER OBJECTIONABLE MATERIAL. SAID MATERIAL MUST BE CAPABLE OF BEING COMPACTED BY MECHANICAL MEANS AND THE MATERIAL MUST HAVE NO TENDENCY TO FLOW OR BEHAVE IN A PLASTIC MANNER UNDER THE TAMPING BLOWS OR PROOF ROLLING.

8) MATERIALS DEEMED BY THE CITY INSPECTOR AS UNSUITABLE FOR BACKFILL OR FILL PURPOSES SHALL BE REMOVED AND REPLACED WITH SELECT BACKFILL MATERIAL.

9) ALL FILL MATERIAL FOR WALKWAYS, DRIVEWAYS AND TRENCHES SHALL BE COMPACTED TO A MINIMUM OF 95% STANDARD PROCTOR AT OPTIMUM MOISTURE CONTENT. OWNER WILL TEST COMPACTION AS NECESSARY AND PAY FOR ALL PASSING TESTS. FAILING TESTS WILL BE PAID FOR BY THE CONTRACTOR.

10) ALL DISTURBED AREAS SHALL BE SEEDED, GRASSED, FERTILIZED, AND LIMED AS SOON AS THEY ARE COMPLETED. ALL DISTURBED AREAS EXCEEDING A 3:1 SLOPE SHALL RECEIVE COCONUT FIBER MAT, WITH BIO-DEGRADABLE STAPLES. INSTALL IN ACCORDANCE WITH MANUFACTURER'S RECOMMENDATIONS.

11) ALL AREAS DISTURBED BY CONTRACTOR'S STAGING AND STORAGE SHALL BE RESTORED TO ORIGINAL CONDITIONS OR BETTER. OWNER WILL TAKE PHOTOS OF THE PROPERTY PRIOR TO BEGINNING WORK. CONTRACTOR SHALL TAKE NECESSARY PRECAUTIONS TO PROTECT ALL TREES AND EXISTING PLANT MATERIAL THAT REMAINS.

12) AFTER NOTICE TO PROCEED IS ISSUED BY THE OWNER, CONTRACTOR SHALL IMMEDIATELY COMMENCE WORK. CONTRACTOR SHALL WORK CONTINUOUSLY UNTIL ALL WORK IS COMPLETE AND ACCEPTED BY THE OWNER. WORK STOPPAGES SHALL BE APPROVED BY THE OWNER.

13) SUBMITTALS ARE REQUIRED FOR ALL MATERIALS FURNISHED FOR THE PROJECT. CONCRETE AND ASPHALT SUPPLIER SHALL BE APPROVED BY THE ENGINEER PRIOR TO CONSTRUCTION.

14) IF NEEDED, THE CONTRACTOR MAY REQUEST CONTRACT TIME EXTENSION FOR RAIN DAYS BEYOND THE NORMAL NUMBER OF RAIN DAYS FOR THAT PARTICULAR MONTH IN ACCORDANCE WITH NOAA DATA FOR HICKORY. OWNER SHALL GIVE CONTRACTOR CONSIDERATION FOR DAYS IN WHICH MINIMUM TEMPERATURE PREVENTS THE CONTRACTOR FROM WORKING ON PLANNED TASKS. HOWEVER, CONTRACTOR IS ENCOURAGED TO COMPLETE OTHER TASKS IF POSSIBLE DURING INCLEMENT WEATHER.

15) OWNER WILL PROVIDE INTERMITTENT OBSERVATION OF CONSTRUCTION. OWNER IS NOT RESPONSIBLE FOR CONTRACTOR'S MEANS AND METHOD. OWNER IS NOT RESPONSIBLE FOR CONTRACTORS SAFETY MEASURES ON THE PROJECT.

16) CONTRACTOR SHALL PROVIDE PORTABLE TOILET ON SITE FOR WORKFORCE FOR THE DURATION OF THE PROJECT. CONTRACTOR SHALL CONTACT CITY OF HICKORY PUBLIC UTILITIES DEPARTMENT AT (828) 323-7500 FOR TEMPORARY WATER SUPPLY IF NEEDED. CONTRACTOR SHALL PAY ALL FEES FOR TEMPORARY WATER.

17) CONTRACTOR SHALL PROMPTLY DISPOSE OF ALL TRASH AND DEBRIS GENERATED BY THE PROJECT TO PREVENT TRASH BEING DEPOSITED ON ADJACENT PROPERTY.

16) ALL FINAL GRADES SHALL BE ADJUSTED AS NECESSARY TO PREVENT PONDING OF WATER

17) CURB RAMPS SHOWN ON DRAWINGS ARE BASED ON NCDOT ALTERNATE CURB RAMPS THAT ARE MODIFIED IN AN EFFORT TO REMAIN IN THE EXISTING FOOTPRINT AND TIE INTO EXISTING CONDITIONS.

18) CURB RAMPS ARE SHOWN ON THE PLANS AT APPROXIMATE LOCATIONS. CONSTRUCT ALL CURB RAMPS IN ACCORDANCE WITH STD 848.05 AND/OR 848.06.

19) DETECTABLE TRUNCATED WARNING DOMES SHALL BE CAST IN PLACE AND INCLUDED WITH EACH UPDATED CURB RAMP. TILES SHALL CONSIST OF YELLOW ENGINEERED PLASTIC OR YELLOW COMPOSITE TILE AND INSTALL ACCORDING TO MANUFACTURES SPECIFICATIONS.

20) THE CONTRACTOR SHALL SAWCUT EXISTING ASPHALT AND/OR CONCRETE SURFACES PRIOR TO REMOVAL UNLESS OTHERWISE DIRECTED BY THE ENGINEER. SAWCUT WIDTH SHALL BE A ONE FOOT MINIMUM FROM THE EXISTING EDGE OF PAVEMENT. SAWCUT PAVEMENT SHALL BE REPLACED AS WELL AS ADDITIONAL PAVEMENT REQUIRED TO TIE IN TO FACE OF PROPOSED CURB AND GUTTER.

21) CONTRACTOR SHALL VERIFY THE LOCATION OF ALL UTILITIES BEFORE INSTALLATION. ANY DAMAGE TO EXISTING UTILITIES SHALL BE REPAIRED BY THE CONTRACTOR AT NO EXTRA COST TO THE CLIENT.

22) UTILITY OWNERS ON THIS PROJECT ARE CITY OF HICKORY (WATER, SEWER, & SIGNAL FIBER), PIEDMONT NATURAL GAS, CENTURY LINK, DUKE ENERGY, CONTERRA, CHARTER COMMUNICATIONS, SEGRA, AND MCMC. UTILITY CONTACT AT DUKE ENERGY IS MR. DOUG WHISNANT (828-850-2310).

23) CONTRACTOR SHALL MAKE EVERY EFFORT TO MAINTAIN ACCESS TO BUSINESSES AND PRIVATE PROPERTIES AT ALL TIMES.

24) INSTALL ADVANCE WORK ZONE WARNING SIGNS WHEN WORK IS WITHIN 40 FT FROM THE EDGE OF TRAVEL LANE AND NO MORE THAN THREE (3) DAYS PRIOR TO THE BEGINNING OF THE CONSTRUCTION.

25) EMPLOYEE ACCESS TO PARKING AND LOADING DOCK AREA SHALL BE MAINTAINED.

DRAWING INDEX

0.....TITLE SHEET – VICINITY MAP, GENERAL NOTES, DRAWING INDEX
1.....SITE PLAN
2.....STAGE FOOTERS
3.....STAGE SURFACE
4.....DETAILS

HICKORY North Carolina®
Life. Well Crafted.

North Carolina 811® www.nc811.org
CALL BEFORE YOU DIG

PRELIMINARY
Do Not Use For Construction

EXISTING: XXXX.XX

PROPOSED: XXXX.XX

CITY OF HICKORY ENGINEERING

CITY OF HICKORY
ENGINEERING DEPARTMENT
76 NORTH CENTER STREET
PO BOX 398
HICKORY, NORTH CAROLINA 28603
(828) 323-7416

HICKORY North Carolina Life. Well Crafted.

City of Hickory
Patrick Beaver Memorial Library
Stage & Amphitheater
SITE PLAN

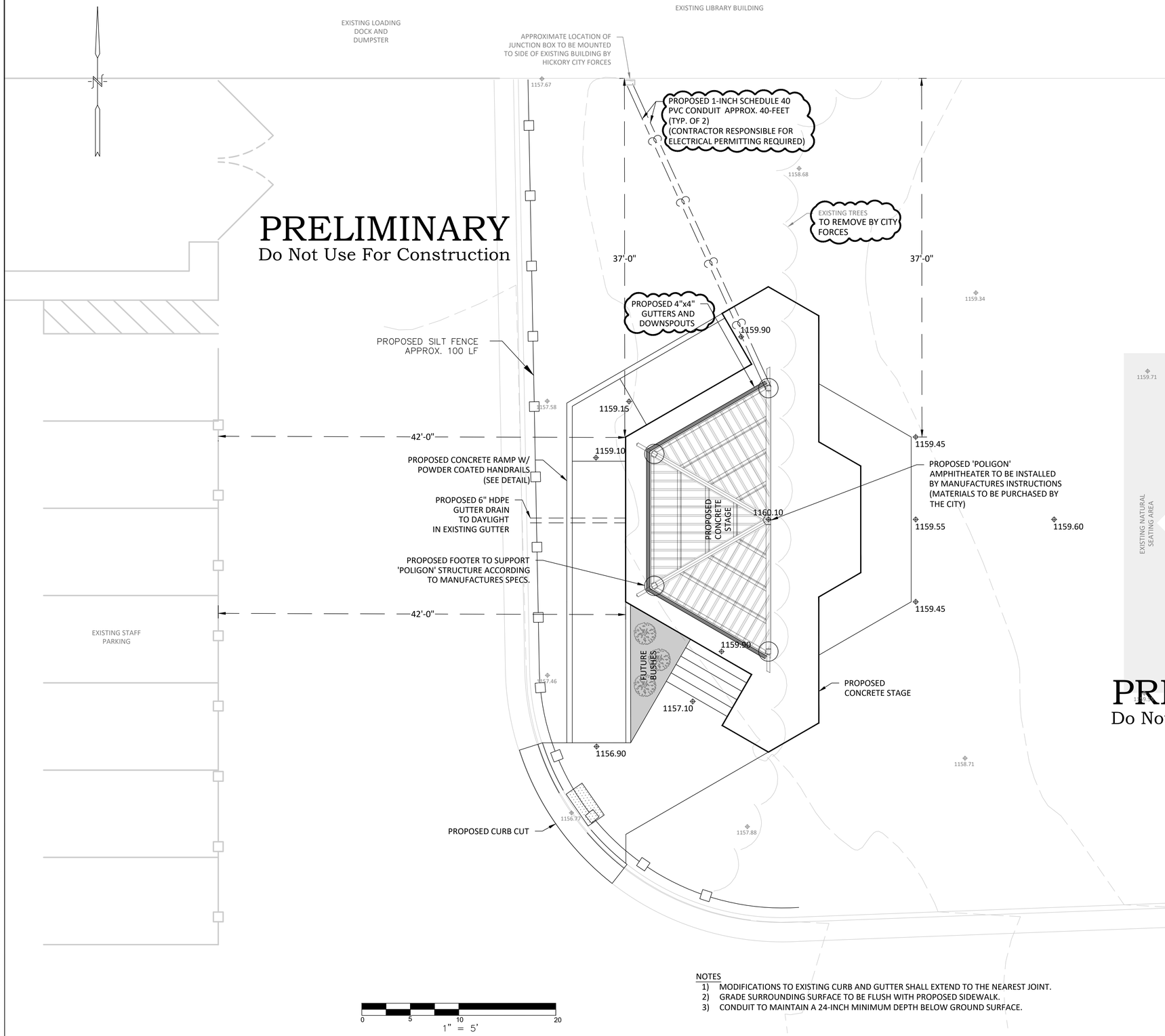

NOTES
1) MODIFICATIONS TO EXISTING CURB AND GUTTER SHALL EXTEND TO THE NEAREST JOINT.
2) GRADE SURROUNDING SURFACE TO BE FLUSH WITH PROPOSED SIDEWALK.
3) CONDUIT TO MAINTAIN A 24-INCH MINIMUM DEPTH BELOW GROUND SURFACE.

0 5 10 20
1" = 5'

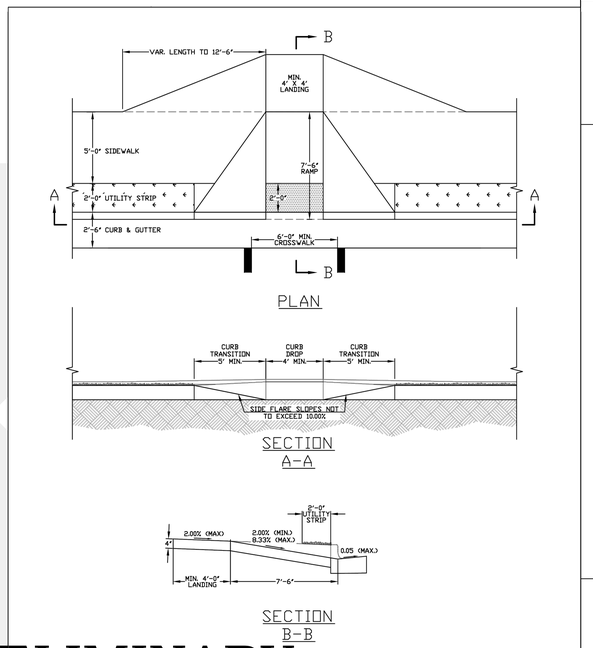

PRELIMINARY
Do Not Use For Construction

NOTES:
1. CONTRACTOR MAY ADJUST SIDEWALK LENGTH AND FULL WIDTH OF THE RAMP FLOOR AS MEASURED ADJACENT TO THE CURB CUT.
2. DETECTABLE WARNING DOMES WILL CONTRAST VISIBILITY WITH ADJOINING SURFACE, EITHER LIGHT-ON-DARK OR DARK-ON-LIGHT, COVERING THE ENTIRE RAMP.

NOT TO SCALE

HICKORY North Carolina Life. Well Crafted.

CITY OF HICKORY

STANDARD WHEELCHAIR RAMP

SHEET 1 OF 4

DATE: 8/16/23

STD. NO. 410

FOOTER SCHEMATIC

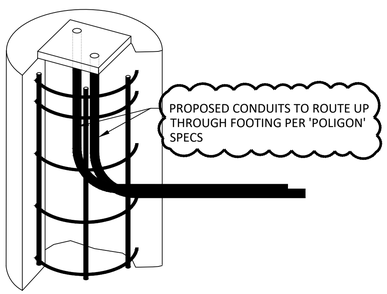

REVISIONS

SCALE:

9/12/2024

DRAWN BY: SRA

SHEET 1 OF 4

No part of this drawing may be reproduced, stored in a retrieval system, or transmitted in any form or by any means without the prior written permission of the City of Hickory

V:\phone\Sam Abernethy\1 - NE Hickory\NE - 375 3rd St. NE - Patrick Beaver Stage\title block.dwg

BACKFILL NOTES

1) ALL BACKFILL AND FILL MATERIAL MUST BE NON-PLASTIC IN NATURE, FREE FROM ROOTS, VEGETATIVE MATTER, WASTE, CONSTRUCTION MATERIAL OR OTHER OBJECTIONABLE MATERIAL. SAID MATERIAL MUST BE CAPABLE OF BEING COMPACTED BY MECHANICAL MEANS AND THE MATERIAL MUST HAVE NO TENDENCY TO FLOW OR BEHAVE IN A PLASTIC MANNER UNDER THE TAMPING BLOWS OR PROOF ROLLING.
2) MATERIALS DEEMED BY THE CITY INSPECTOR AS UNSUITABLE FOR BACKFILL OR FILL PURPOSES SHALL BE REMOVED AND REPLACED WITH SELECT BACKFILL MATERIAL.
3) ALL FILL MATERIAL FOR WALKWAYS, DRIVEWAYS AND TRENCHES SHALL BE COMPACTED TO A MINIMUM OF 95% STANDARD PROCTOR AT OPTIMUM MOISTURE CONTENT. OWNER WILL TEST COMPACTION AS NECESSARY AND PAY FOR ALL PASSING TESTS. FAILING TESTS WILL BE PAID FOR BY THE CONTRACTOR.
4) ALL DISTURBED AREAS SHALL BE SEEDED, GRASSED, FERTILIZED, AND LIMED AS SOON AS THEY ARE COMPLETED. ALL DISTURBED AREAS EXCEEDING A 3:1 SLOPE SHALL RECEIVE COCONUT FIBER MAT, WITH BIO-DEGRADABLE STAPLES. INSTALL IN ACCORDANCE WITH MANUFACTURER'S RECOMMENDATIONS.
5) ALL AREAS DISTURBED BY CONTRACTOR'S STAGING AND STORAGE SHALL BE RESTORED TO ORIGINAL CONDITIONS OR BETTER. OWNER WILL TAKE PHOTOS OF THE PROPERTY PRIOR TO BEGINNING WORK. CONTRACTOR SHALL TAKE NECESSARY PRECAUTIONS TO PROTECT ALL TREES AND EXISTING PLANT MATERIAL THAT REMAINS.

GENERAL NOTES

1) STRUCTURE WAS DESIGNED USING HEXAGONAL PATTERN. ALL CORRESPONDING CORNERS FOLLOWING THIS HEXAGONAL PATTERN SHALL MEET AT A 120 ANGLE OF ITS INVERSE.

PRELIMINARY
Do Not Use For Construction

NOTES:

1) FOUNDATIONS SHALL BEAR ON COMPETENT, UNDISTURBED SOIL OR 95% COMPACTED FILL. IF SIGNS OF ORGANIC MATERIAL, UNCONTROLLED FILL, CLAY OR SILT, HIGH WATER TABLE, OR OTHER POSSIBLE DETRIMENTAL CONDITIONS ARE FOUND, CONSTRUCTION OF THE FOUNDATION MUST BE STOPPED AND CONTRACTOR SHALL SEEK DIRECTION FROM THE PROJECT ENGINEER.
2) NO FOUNDATIONS SHALL BE PLACED INTO OR ADJACENT TO SUBGRADE CONTAINING WATER, ICE FROST, ORGANIC, OR LOOSE MATERIAL.
3) WATER SHALL NOT BE PERMITTED TO ACCUMULATE IN FOUNDATION EXCAVATIONS.
4) ALLOWABLE SOIL PRESSURE:
   A) VERTICAL BEARING - 2,000 PSF
   B) LATERAL BEARING - 100 PSF/FT

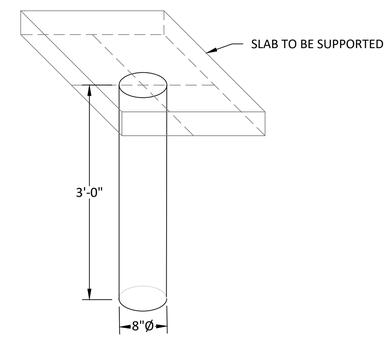

SUPPORT PIER DETAIL
NOT TO SCALE

NOTES:

1) WWF TO BE 6X6 - W2.9 IN THE SLAB
2) MAINTAIN REBAR 3" CLEAR FROM ALL SOIL SURFACES
3) CONCRETE COMPRESSIVE STRENGTH: 4,000 PSI
4) ASSUMED SOIL BEARING PRESSURE 2,000 PSF
5) FOOTING BASE TO BE BELOW FROST LINE.
6) VIBRATORY METHODS SHALL BE USED DURING CONCRETE PLACEMENT FOR THE WALL.
7) EXPOSED WALL FACE TO BE SURFACE COATED WITH CONCRETE FINISHER FOR A UNIFORMLY SMOOTH PRODUCT.

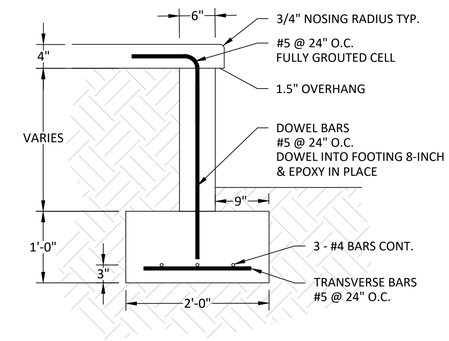

PERIMETER WALL DETAIL
NOT TO SCALE

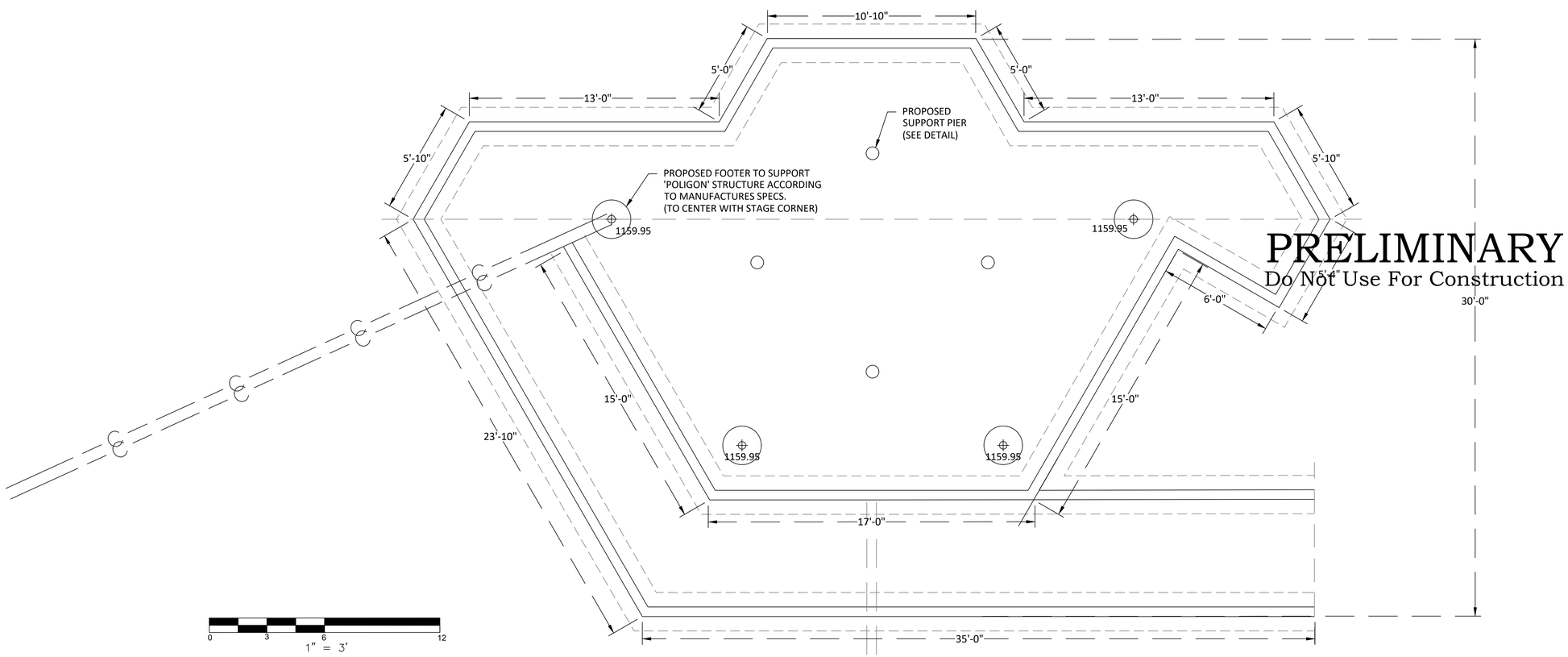

PRELIMINARY
Do Not Use For Construction

STAGE FOOTERS
1" = 3'

CITY OF HICKORY ENGINEERING

CITY OF HICKORY
ENGINEERING DEPARTMENT
76 NORTH CENTER STREET
PO BOX 398
HICKORY, NORTH CAROLINA 28603
(828) 323-7416

HICKORY Life, Well Crafted.

City of Hickory
Patrick Beaver Memorial Library
Stage & Amphitheater
STAGE FOOTERS

REVISIONS

SCALE:

9/12/2024
DRAWN BY: SRA

SHEET 2 OF 4

V:\Jobs\Sam Abernethy\1 - NE Hickory\NE - 375 3rd St. NE - Patrick Beaver Stage\Title block.dwg

No part of this drawing may be reproduced, stored in a retrieval system, or transmitted in any form or by any means without the prior written permission of the City of Hickory

NOTE:
1. CONCRETE SHALL HAVE A COMPRESSIVE STRENGTH OF 3000 PSI AT 28 DAYS
2. SURFACE SHALL BE ROUGH NON-SKID TYPE
3. ALL STAIRS SHALL HAVE CROSS-SLOPE OF 1/4" PER FOOT TO DRAIN FROM RISER TO NOSING.

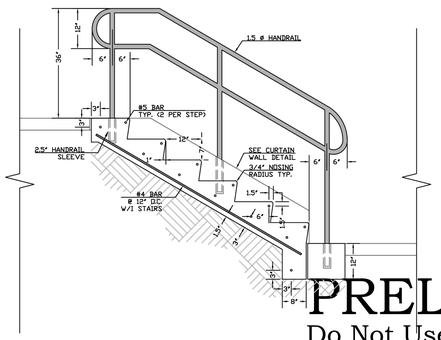

SECTION
A-A

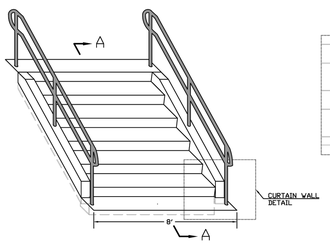

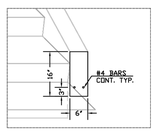

CURTAIN WALL DETAIL

NOT TO SCALE

HICKORY North Carolina Life. Well Crafted.	CITY OF HICKORY STAIR DETAIL	DATE: 8/16/23 — SHEET 1 OF 1

PRELIMINARY
Do Not Use For Construction

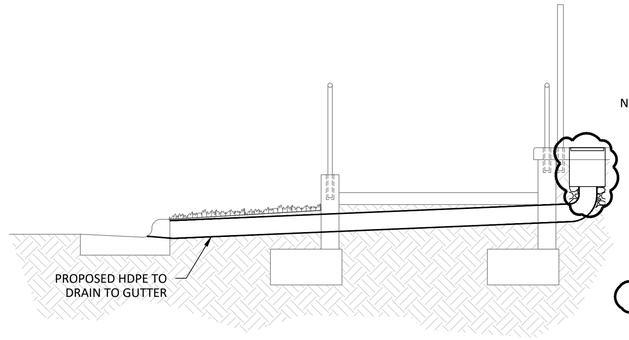

GUTTER DRAIN DETAIL
NOT TO SCALE

NOTES:
1) ENSURE PIPE SLOPE TO DRAIN TOWARD GUTTER.
2) PIPE SHALL BE HIGH DENSITY POLYETHYLENE (HDPE) PIPE WITH CORRUGATED EXTERIOR / SMOOTH INTERIOR CONFORMING TO THE REQUIREMENTS OF AASHTO SPECIFICATION M294 FOR CORRUGATED POLYETHYLENE PIPE AND SHALL REQUIRE COUPLING BANDS AND FITTING TO BE INSTALLED PER MANUFACTURERS RECOMMENDATIONS.
3) COUPLING BANDS AND FITTINGS SHALL BE USED FOR JOINING ALL HDPE PIPE. COUPLING BANDS SHALL COVER AT LEAST ONE FULL CORRUGATION ON EACH SECTION OF PIPE. GASKET COUPLING BANDS ARE REQUIRED BETWEEN ALL PIPE JOINTS.
4) COMPACTION REQUIREMENTS OVER AND AROUND PIPE SHALL MEET OR EXCEED THOSE INTENDED FOR THE SURROUNDING STRUCTURE.
5) GRAVEL BASE SHALL BE PROVIDED BENEATH CATCH BASINS MIN. 6-INCH DEEP.

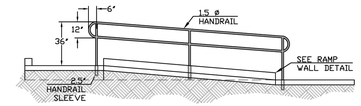

SECTION
A-A

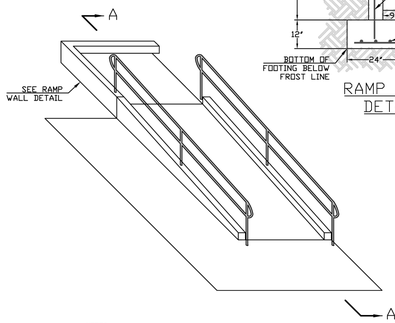

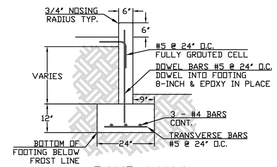

RAMP WALL DETAIL

NOTES:
1. WALKING SURFACE SHALL BE ROUGH NON-SKID TYPE.
2. MAINTAIN REBAR 3" CLEAR FROM ALL SOIL SURFACES
3. SIDEWALK CONCRETE COMPRESSIVE STRENGTH 3000 PSI AT 28 DAYS
4. WALL CONCRETE COMPRESSIVE STRENGTH 4,000 PSI AT 28 DAYS
5. ASSUMED SOIL BEARING PRESSURE 2,000 PSF
6. FOOTING BASE TO BE BELOW FROST LINE
7. VIBRATORY METHODS SHALL BE USED DURING CONCRETE PLACEMENT FOR THE WALL.
8. EXPOSED WALL FACE TO BE SURFACE COATED WITH CONCRETE FINISHER FOR A UNIFORMLY SMOOTH PRODUCT.

NOT TO SCALE

HICKORY North Carolina Life. Well Crafted.	CITY OF HICKORY RAMP DETAIL	DATE: 8/30/24 — SHEET 1 OF 1 — STD. NO. 416

NOTES
1) SHELTER CONCRETE PAD SHALL SLOPE TO DRAIN BUT NOT TO EXCEED 2.00% CROSS SLOPE IN ANY DIRECTION.
2) SUB-BASE SHALL INCLUDE 6-INCHES ABC STONE OVER 6 MIL. POLY SUPPORTING 4-INCHES CONCRETE W/ 6X6X10/10 WWM.
3) CONCRETE SHALL HAVE A COMPRESSIVE STRENTH OF 3000 PSI AT 28 DAYS.
4) SURFACE SHALL BE ROUGH NON-SKID TYPE.

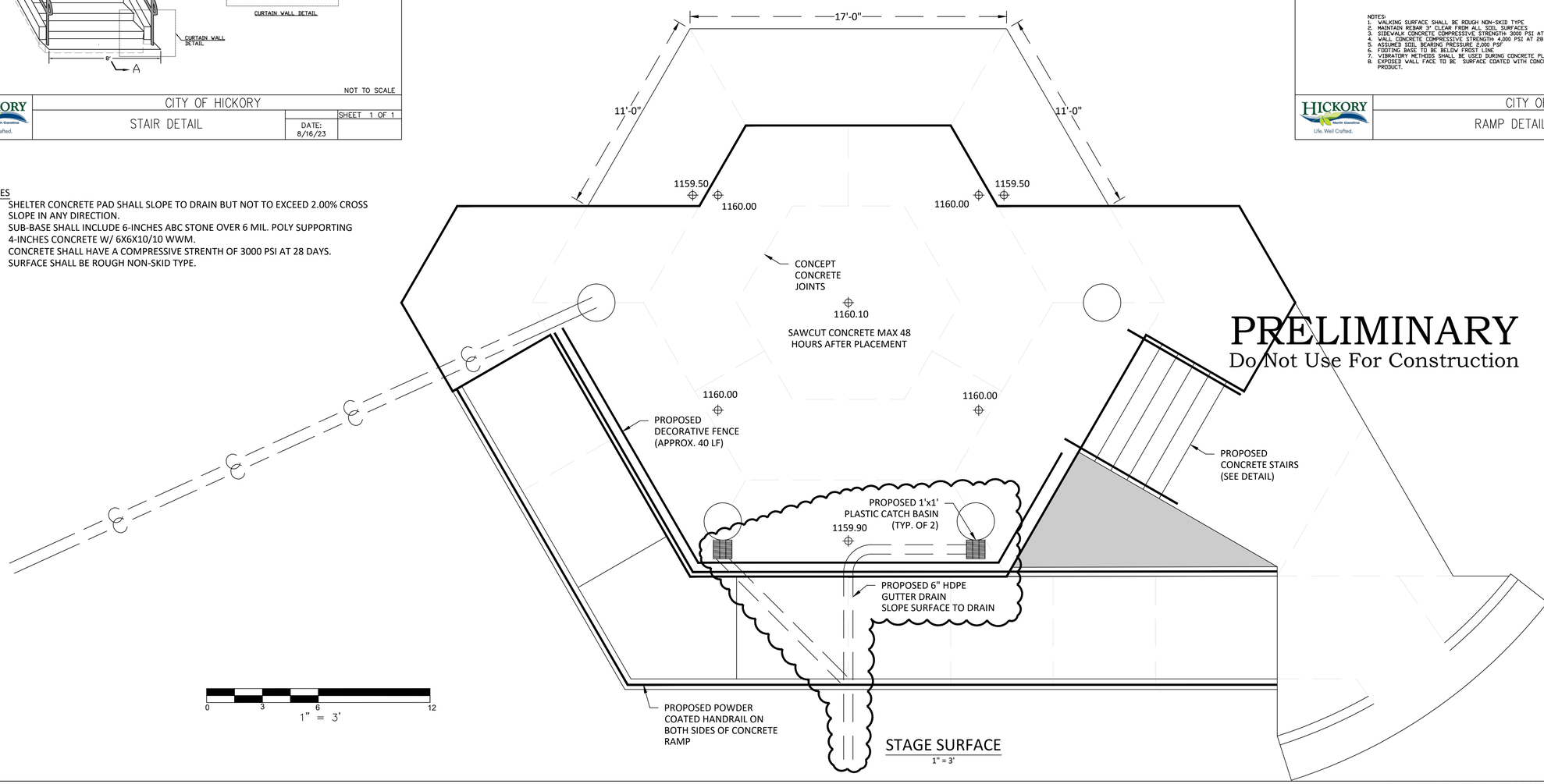

PRELIMINARY
Do Not Use For Construction

STAGE SURFACE
1" = 3'

CITY OF HICKORY ENGINEERING
CITY OF HICKORY
ENGINEERING DEPARTMENT
76 NORTH CENTER STREET
PO BOX 398
HICKORY, NORTH CAROLINA 28603
(828) 323-7416

HICKORY North Carolina Life. Well Crafted.

City of Hickory
Patrick Beaver Memorial Library
Stage & Amphitheater
STAGE SURFACE

REVISIONS

SCALE:

9/12/2024
DRAWN BY: SRA

SHEET 3 OF 4

V:\phoenix\Sam Abernethy\1 - NE Hickory\NE - 375 3rd St. NE - Patrick Beaver Stage\Site Work.dwg

No part of this drawing may be reproduced, stored in a retrieval system, or transmitted in any form or by any means without the prior written permission of the City of Hickory

SILT FENCE

MATERIALS:

1. USE A SYNTHETIC FILTER FABRIC OF AT LEAST 95% BY WEIGHT OF POLYEFINS OR POLYESTER, WHICH IS CERTIFIED BY THE MANUFACTURER OR SUPPLIER AS CONFORMING TO THE REQUIREMENTS IN ASTM D 6461.

   SYNTHETIC FILTER FABRIC SHOULD CONTAIN ULTRAVIOLET RAY INHIBITORS AND STABILIZERS TO PROVIDE A MINIMUM OF 6 MONTHS OF EXPECTED USABLE CONSTRUCTION LIFE AT A TEMPERATURE RANGE OF 0° TO 120° F.

2. ENSURE THAT POSTS FOR SEDIMENT FENCES ARE 1.25 LB/LIN FT. MINIMUM STEEL WITH A MINIMUM LENGTH OF 5 FEET. MAKE SURE THAT STEEL POSTS HAVE PROJECTIONS TO FACILITATE FASTENING THE FABRIC.

3. FOR REINFORCEMENT OF STANDARD STRENGTH FILTER FABRIC, USE WIRE FENCE WITH A MINIMUM 14 GAUGE AND A MAXIMUM MESH SPACING OF 6 INCHES.

CONSTRUCTION:

1. CONSTRUCT THE SEDIMENT BARRIER OF STANDARD STRENGTH OR EXTRA STRENGTH SYNTHETIC FILTER FABRICS.
2. ENSURE THAT THE HEIGHT OF THE SEDIMENT FENCE DOES NOT EXCEED 24 INCHES ABOVE THE GROUND SURFACE. (HIGHER FENCES MAY IMPOUND VOLUMES OF WATER SUFFICIENT TO CAUSE FAILURE OF THE STRUCTURE.)
3. CONSTRUCT THE FILTER FABRIC FROM A CONTINUOUS ROLL CUT TO THE LENGTH OF THE BARRIER TO AVOID JOINTS. WHEN JOINTS ARE NECESSARY, SECURELY FASTEN THE FILTER CLOTH ONLY AT A SUPPORT POST WITH 4 FEET MINIMUM OVERLAP TO THE NEXT POST.
4. SUPPORT STANDARD STRENGTH FILTER FABRIC BY WIRE MESH FASTENED SECURELY TO THE UPSLOPE SIDE OF THE POSTS. EXTEND THE WIRE MESH SUPPORT TO THE BOTTOM OF THE TRENCH. FASTEN THE WIRE REINFORCEMENT, THEN FABRIC ON THE UPSLOPE SIDE OF THE FENCE POST. WIRE OR PLASTIC ZIP TIES SHOULD HACE A MINIMUM 50 POUNDS TENSILE STRENGTH.
5. WHEN A WIRE MESH SUPPORT FENCE IS USED, SPACE POSTS A MAXIMUM OF 8 FEET APART. SUPPORT POSTS SHOULD BE DRIVEN SECURELY INTO THE GROUND A MINIMUM OF 24 INCHES.
6. EXTRA STRENGTH FILTER FABRIC WITH 6 FEET POST SPACING DOES NOT REQUIRE WIRE MESH SUPPORT FENCE. SECURELY FASTEN THE FILTER FABRIC DIRECTLY TO POSTS. WIRE OR PLASTIC ZIP TIES SHOULD HAVE MINIMUM 50 POUND TENSILE STRENGTH.
7. EXCAVATE A TRENCH APPROXIMATELY 4 INCHES WIDE AND 8 INCHES DEEP ALONG THE PROPOSED LINE OF POSTS AND UPSLOPE FROM THE BARRIER.
8. PLACE 12 INCHES OF THE FABRIC ALONG THE BOTTOM AND SIDE OF THE TRENCH.
9. BACKFILL THE TRENCH WITH SOIL PLACED OVER THE FILTER FABRIC AND COMPACT. THOROUGH COMPACTION OF THE BACKFILL IS CRITICAL TO SILT FENCE PERFORMANCE.
10. DO NOT ATTACH FILTER FABRIC TO EXISTING TREES.

MAINTENANCE:

1. INSPECT SEDIMENT FENCES AT LEAST ONCE A WEEK AND AFTER EACH RAINFALL. MAKE ANY REQUIRED REPAIRS IMMEDIATELY.
2. SHOULD THE FABRIC OF A SEDIMENT FENCE COLLAPSE, TEAR, DECOMPOSE, OR BECOME INNEFFECTIVE, REPLACE IT PROMPTLY.
3. REMOVE SEDIMENT DEPOSITS AS NECESSARY TO PROVIDE ADEQUATE STORAGE VOLUME FOR THE NEXT RAIN AND TO REDUCE PRESSURE ON THE FENCE. TAKE CARE TO AVOID UNDERMINING THE FENCE DURING CLEANOUT.
4. REMOVE ALL FENCING MATERIALS AND UNSTABLE SEDIMENT DEPOSITS AND BRING THE AREA TO GRADE AND STABILIZE IT AFTER THE CONTRIBUTING DRAINAGE AREA HAS BEEN PROPERLY STABILIZED.

NOT TO SCALE

HICKORY North Carolina Life. Well Crafted.	CITY OF HICKORY GENERAL NOTES FOR EROSION/SEDIMENTATION CONTROL	DATE: 1-4-23	SHEET 1 OF 1 STD. NO. 101

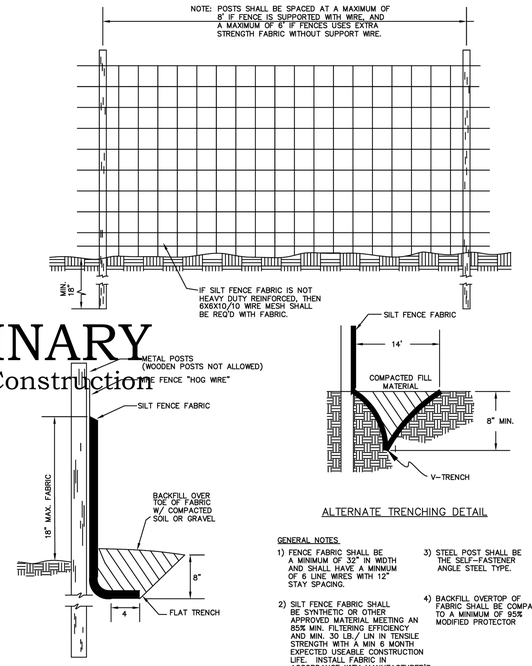

ALTERNATE TRENCHING DETAIL

GENERAL NOTES:

1) FENCE FABRIC SHALL BE A MINIMUM OF 32" IN WIDTH AND SHALL HAVE A MINMUM OF 6 LINE WIRES WITH 12" STAY SPACING.
2) SILT FENCE FABRIC SHALL BE SYNTHETIC OR OTHER APPROVED MATERIAL MEETING AN 85% MIN. FILTERING EFFICIENCY AND MIN. 30 LB./ LIN IN TENSILE STRENGTH WITH A MIN 6 MONTH EXPECTED USEABLE CONSTRUCTION LIFE. INSTALL FABRIC IN ACCORDANCE WITH MANUFACTURER'S INSTRUCTIONS.
3) STEEL POST SHALL BE THE SELF-FASTENER ANGLE STEEL TYPE.
4) BACKFILL OVERTOP OF FABRIC SHALL BE COMPACTED TO A MINIMUM OF 95% MODIFIED PROTECTOR

NOT TO SCALE

HICKORY North Carolina Life. Well Crafted.	CITY OF HICKORY TEMPORARY SILT FENCE	DATE: 2-1-07	SHEET 1 OF 1 STD. NO. 102

PRELIMINARY
Not For Construction

STABILIZATION REQUIREMENTS:

Stabilization for this project shall comply with the time frame guidelines as specified by NCG-010000 general construction permit effective August 3, 2011 issued by the North Carolina Department of Environment and Natural Resources Division of Water Quality. Temporary or permanent ground cover stabilization shall occur within 7 calendar days from the last land- disturbing activity, with the following exceptions in which temporary or permanent ground cover shall be provided in 14 calendar days from the last land-disturbing activity:

- *Slopes between 2: 1 and 3:1, with a slope length of 10 ft. or less*
- *Slopes 3:1 or flatter, with a slope of length of 50 ft. or less*
- *Slopes 4:1 or flatter*

The stabilization timeframe for High Quality Water (HQW) Zones shall be 7 calendar days with no exceptions for slope grades or lengths. High Quality Water Zones (HQW) Zones are defined by North Carolina Administrative Code 15A NCAC 04A.0105 (25). Temporary and permanent ground cover stabilization shall be achieved in accordance with the provisions in this contract and as directed.

SEEDING AND MULCHING:

The kinds of seed and fertilizer, and the rates of application of seed, fertilizer, and limestone, shall be as stated below. During periods of overlapping dates, the kind of seed to be used shall be determined. All rates are in pounds per acre.

August 1 - June 1		***May 1 - September 1***	
20#	*Kentucky Bluegrass*	*20#*	*Kentucky Bluegrass*
75#	*Hard Fescue*	*75#*	*Hard Fescue*
25#	*Rye Grain*	*10#*	*German or Browntop Millet*
500#	*Fertilizer*	*500#*	*Fertilizer*
4000#	*Limestone*	*4000#*	*Limestone*

Approved Tall Fecscue Cultivars:

2nd Millennium	*Fidelity*	*Titan Ltd*	*Turbo*
Duster	*Millennium*	*Cayenne*	*Coronado*
Magellan	*Silverstar*	*Greenkeeper*	*Kalahari*
Rendition	*Barrington*	*Paraiso*	*Quest*
Avenger	*Finesse II*	*Titanium*	*Ultimate*
Endeavor	*Montauk*	*Chapel Hill*	*Coyote*
Masterpiece	*Southern Choice II*	*Greystone*	*Kentucky31*
Scorpion	*Biltmore*	*Picasso*	*Rebel Exeda*
Barlexas	*Firebird*	*Tomahawk*	*Watchdog*
Escalade	*Mustang 3*	*Chesapeake*	*Davinci*
Matador	*Stetson*	*Inferno*	*Kitty Hawk*
Shelby	*Bingo*	*Piedmont*	*Rebel Sentry*
Barlexas II	*Focus*	*Tacer*	*Wolfpack*
Falcon II, ***III,*** *IV & V*	*Olympic Gold*	*Constitution*	*Dynasty*
Matador GT	*Tarheel*	*Justice*	*Kitty Hawk 2000*
Signia	*Bravo*	*Pure Gold*	*Regiment II*
Barrera	*Grande II*	*Trooper*	*Dominion*
	Padre	*Chipper*	*Lexington*
		Jaguar 3	*Rembrandt*
		Prospect	

Approved Kentucky Bluegrass Cultivars:

Alpine	*Bariris*	*Rugby II*	*Midnight*
Apollo	*Envicta*	*Bordeaux*	*Sonoma*
Arcadia	*Rugby*	*Kenblue*	*Chicago II*
Arrow	*Bedazzled*	*Showcase*	*Midnight II*
Award	*Impact*	*Champagne*	

Approved Tall Fecscue Cultivars:

Alpine	*Bariris*	*Rugby II*	*Midnight*
Apollo	*Envicta*	*Bordeaux*	*Sonoma*
Arcadia	*Rugby*	*Kenblue*	*Chicago II*
Arrow	*Bedazzled*	*Showcase*	*Midnight II*
Award	*Impact*	*Champagne*	

Approved Hard Fescue Cultivars:

Chariot Firefly	*Rhino*	*Scaldis II*	*Reliant IV*
Heron Minotaur	*Warwick*	*Reliant II*	*Stoneheng*
Nordic	*Oxford*	*Spartan II*	

On cut and fill slopes 2:1 or steeper add 20# Sericea Lespedeza January 1 - December 31.

Fertilizer shall be 10-20-20 analysis. A different analysis of fertilizer may be used provided the ***1-*** *2-2 ratio is maintained and the rate of application adjusted to provide the same amount of plant food as a 10-20-20 analysis and as directed.*

STABILIZATION REQUIREMENTS

Stabilization for this project shall comply with the time frame guidelines as specified by the NCG-010000 general construction permit effective August 3, 2011 issued by the North Carolina Department of Environment and Natural Resources Division of Water Quality. Temporary or permanent ground cover stabilization shall occur within 7 calendar days from the last land- disturbing activity, with the following exceptions in which temporary or permanent ground cover shall be provided in 14 calendar days from the last land-disturbing activity:

- *Slopes between 2:1 and 3:1, with a slope length of 10 ft. or less*
- *Slopes 3:1 or flatter, with a slope of length of 50 ft. or less*
- *Slopes 4:1 or flatter*

The stabilization timeframe for High Quality Water (HQW) Zones shall be 7 calendar days with no exceptions for slope grades or lengths. High Quality Water Zones (HQW) Zones are defined by North Carolina Administrative Code 15A NCAC 04A.0105 (25). Temporary and permanent ground cover stabilization shall be achieved in accordance with the provisions in this contract and as directed.

NATIVE GRASS SEEDING AND MULCHING

Native Grass Seeding and Mulching shall be performed on the disturbed areas of wetlands and riparian areas, and adjacent to Stream Relocation and/or trout stream construction within a 50 foot zone on both sides of the stream or depression, measured from top of stream bank or center of depression. The stream bank of the stream relocation shall be seeded by a method that does not alter the typical cross section of the stream bank. Native Grass Seeding and Mulching shall also be performed in the permanent soil reinforcement mat section of preformed scour holes, and in other areas as directed.

The kinds of seed and fertilizer, and the rates of application of seed, fertilizer, and limestone, shall be as stated below. During periods of overlapping dates, the kind of seed to be used shall be determined. All rates are in pounds per acre.

August 1 - June 1	***Mav 1 - September 1***
18# Creeping Red Fescue	*18# Creeping Red Fescue*
8# Big Bluestem	*8# Big Bluestem*
6# Indiangrass	*6# Indiangrass*
4# Switchgrass	*4# Switchgrass*
35# Rye Grain	*25# German or Browntop Millet*
500# Fertilizer	*500# Fertilizer*
4000# Limestone	*4000# Limestone*

Approved Creeping Red Fescue Cultivars:

Aberdeen	*Boreal*	*Epic*	*Cindy Lou*

Fertilizer shall be I 0-20-20 analysis. A different analysis of fertilizer may be used provided the 1- 2-2 ratio is maintained and the rate of application adjusted to provide the same amount of plant food as a 10-20-20 analysis and as directed.

Temporary Seeding

Fertilizer shall be the same analysis as specified for Seeding and Mulching and applied at the rate of 400 pounds and seeded at the rate of 50 pounds per acre. German Millet or Browntop Millet shall be used in summer months and rye grain during the remainder of the year. The Engineer will determine the exact dates for using each kind of seed.

Fertilizer Topdressing

Fertilizer used for topdressing shall be 16-8-8 grade and shall be applied at the rate of 500 pounds per acre. A different analysis of fertilizer may be used provided the 2-1-1 ratio is maintained and the rate of application adjusted to provide the same amount of plant food as 16-8- 8 analysis and as directed.

Supplemental Seeding

The kinds of seed and proportions shall be the same as specified for Seeding and Mulching, and the rate of application may vary from 25# to 75# per acre. The actual rate per acre will be determined prior to the time of topdressing and the Contractor will be notified in writing of the rate per acre, total quantity needed, and areas on which to apply the supplemental seed. Minimum tillage equipment, consisting of a sod seeder shall be used for incorporating seed into the soil as to prevent disturbance of existing vegetation. A clodbuster (ball and chain) may be used where degree of slope prevents the use of a sod seeder.

Mowing

The minimum mowing height shall be 6 inches.

TEMPORARY SEEDING:

Fertilizer shall be the same analysis as specified for Seeding and Mulching and applied at the rate of 400 pounds and seeded at the rate of 50 pounds per acre. German Millet, or Browntop Millet shall be used in summer months and rye grain during the remainder of the year. The Engineer will determine the exact dates for using each kind of seed.

FERTILIZER TOPDRESSING

Fertilizer used for topdressing shall be 16-8-8 grade and shall be applied at the rate of 500 pounds per acre. A different analysis of fertilizer may be used provided the 2-1-1 ratio is maintained and the rate of application adjusted to provide the same amount of plant food as 16-8- 8 analysis and as directed.

SUPPLEMENTAL SEEDING

The kinds of seed and proportions shall be the same as specified for Seeding and Mulching, and the rate of application may vary from 25# to 75# per acre. The actual rate per acre will be determined prior to the time of topdressing and the Contractor will be notified in writing of the rate per acre, total quantity needed, and areas on which to apply the supplemental seed. Minimum tillage equipment, consisting of a sod seeder shall be used for incorporating seed into the soil as to prevent disturbance of existing vegetation. A clodbuster (ball and chain) may be used where degree of slope prevents the use of a sod seeder.

MOWING

The minimum mowing height on this project shall be six inches.

LAWN-TYPE APPEARANCE

All areas adjacent to lawns must be hand finished as directed to give a lawn type -appearance. Remove all trash, debris, and stones ¾" and larger in diameter or other obstructions that could interfere with providing a smooth lawn type appearance. These areas shall be reseeded to match their original vegetative conditions, unless directed otherwise by the Field Operations Engineer.

PRELIMINARY
Do Not Use For Construction

CITY OF HICKORY ENGINEERING
CITY OF HICKORY
ENGINEERING DEPARTMENT
76 NORTH CENTER STREET
PO BOX 398
HICKORY, NORTH CAROLINA 28603
(828) 323-7416

HICKORY North Carolina Life. Well Crafted.

City of Hickory
Patrick Beaver Memorial Library
Stage & Amphitheater
DETAILS

REVISIONS

SCALE:

8/30/2024
DRAWN BY: SRA

SHEET 4 OF 4

V:\shared\Sam Abernethy\1 - NE Hickory\NE - 375 3rd St. NE - Patrick Beaver Stage_Patrick Beaver Stage7.dwg

No part of this drawing may be reproduced, stored in a retrieval system, or transmitted in any form or by any means without the prior written permission of the City of Hickory